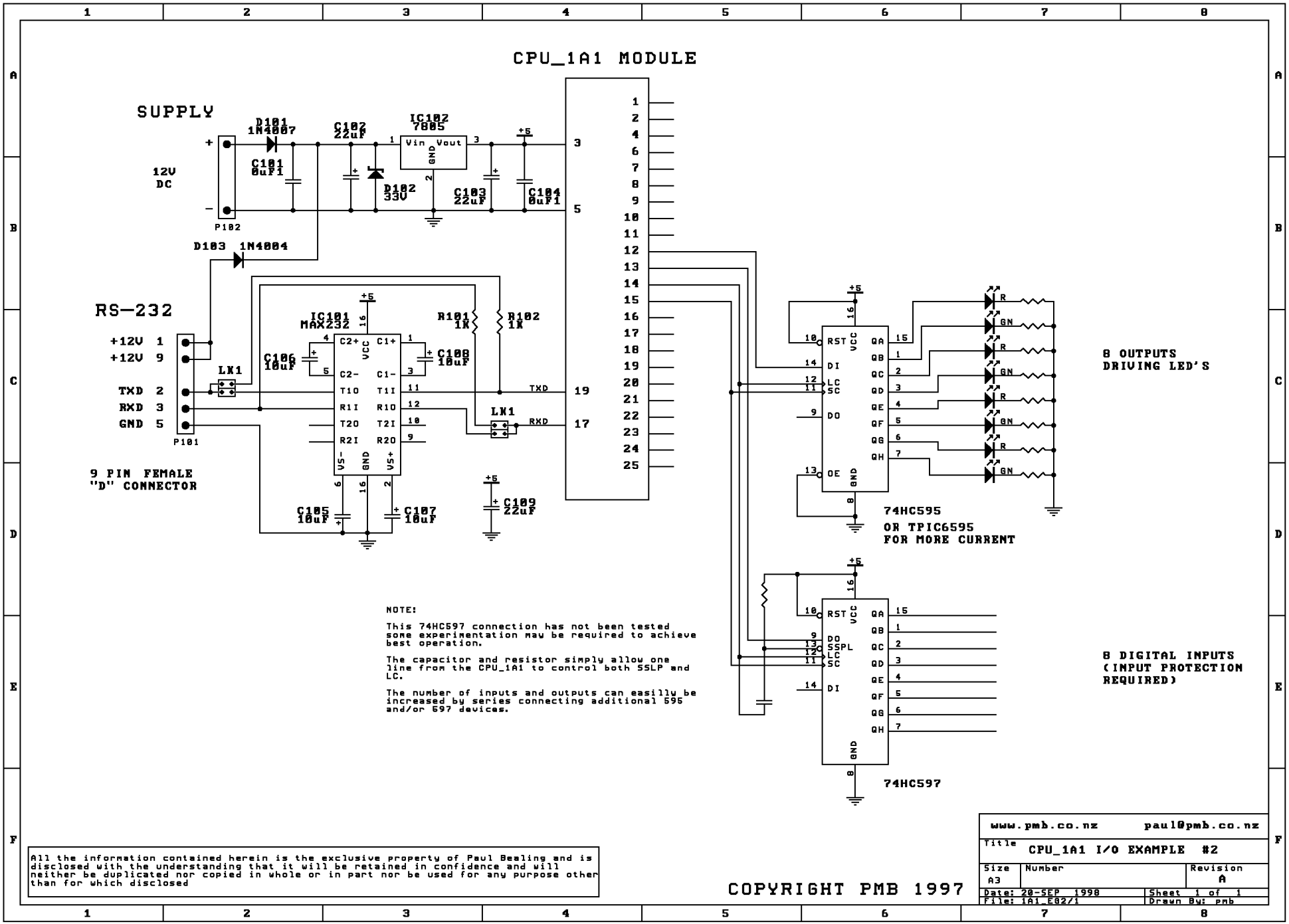
CPU_1A1 MODULE
SUPPLY
12V DC
P102
D101 1N4007
C101 0uF1
C102 22uF
IC102 7805
Vin Vout GND
D102 33V
C103 22uF
C104 0uF1
+5
D103 1N4004
RS-232
+12V 1
+12V 9
TXD 2
RXD 3
GND 5
P101
9 PIN FEMALE "D" CONNECTOR
LX1
IC101 MAX232
C2+ C1+ C2- C1- T1O T1I R1I R1O T2O T2I R2I R2O VCC GND V5- V5+
C106 10uF
C108 10uF
C105 10uF
C107 10uF
C109 22uF
R101 1K
R102 1K
TXD
RXD
RST DI LC SC DO OE QA QB QC QD QE QF QG QH
74HC595
OR TPIC6595
FOR MORE CURRENT
8 OUTPUTS DRIVING LED'S
R GN
NOTE:
This 74HC597 connection has not been tested some experimentation may be required to achieve best operation.
The capacitor and resistor simply allow one line from the CPU_1A1 to control both SSLP and LC.
The number of inputs and outputs can easilly be increased by series connecting additional 595 and/or 597 devices.
RST DO SSPL LC SC DI
74HC597
8 DIGITAL INPUTS (INPUT PROTECTION REQUIRED)
www.pmb.co.nz
paul@pmb.co.nz
Title
CPU_1A1 I/O EXAMPLE #2
Size A3
Number
Revision A
Date: 20-SEP 1998
Sheet 1 of 1
File: 1A1_E02/1
Drawn By: pmb
All the information contained herein is the exclusive property of Paul Bealing and is disclosed with the understanding that it will be retained in confidence and will neither be duplicated nor copied in whole or in part nor be used for any purpose other than for which disclosed
COPYRIGHT PMB 1997